BALDWIN TOWNSHIP
30239 – 128th STREET
PO BOX 25
PRINCETON, MN 55371
TELEPHONE: (763) 389-8931
Fax: (763) 389-2751

For Office Use Only
Permit # _____
Sent to County _____
Initial Insp _____
Final Insp _____
Refund _____

# PERMIT APPLICATION FOR ACCESS TO TOWNSHIP ROAD

**NOTE: TOWNSHIP PERMIT IS NOT REQUIRED FOR ACCESS OFF OF A COUNTY ROAD OR STATE HIGHWAY. CHECK WITH COUNTY ZONING DEPARTMENT**

Inspection Fee, Construction Deposit and EMS Sign Fees are payable at time of application

**NOTE: Applicant for Access Permit is responsible for informing home buyer that headwalls are not allowed**

$100.00 Inspection Fee Cash ___ Check # _____ Date _____ Paid by_____
$50.00 Construction Deposit Cash ___ Check # _____ Date _____ Paid by _____
$67.32 EMS Sign Fee Cash ___ Check # _____ Date _____ Paid by_____

If the work is not completed as outlined, costs incurred by the Township to remove or complete the construction will be deducted from the Construction Deposit.

**PLEASE PRINT**

Applicant Name: _____Phone: _____ Fax: _____
Address: (Street, City, Zip) _____

Property Owner: _____ Phone: _____
Address: (Street, City, Zip) _____

Proposed access location (Street name) _____miles/feet N-E-S-W of intersecting Street (Name) _____

Legal Description: Located in _____Quarter of Section ____ Township 35 Range 26 or
Located in Plat of (Name) _____ Lot_____ Block_____
Parcel Identification Number 01-_____-_____
Property Address _____

Access Purpose Residential _____ Commercial _____

Number of present accesses _____ Date access will be installed _____ **(if not installed by the date on the application the permitee will forfeit their construction deposit)**

**MORE THAN ONE DRIVEWAY ACCESS PER PROPERTY REQUIRES TOWNSHIP BOARD APPROVAL**

**Attach a sketch of the property, present & proposed accesses in relation to intersecting roads**

I (we) the undersigned, herewith make application for permission to construct the access at the above location, said access to be constructed to conform to current Township Engineering Standards. It is further agreed that no work in connection with this application will be started until the application is approved and the permit issued. It is expressly understood that this permit is conditioned upon replacement or restoration of the Township Road to its original condition. **Further,** I (we) the undersigned, have received a copy of current Township Engineering Standards and Minnesota Statute 160.27 Particular uses of Right of Way; Subdivision 5, Misdemeanors.

Signed: _____ Name (Print) _____
Date: _____ Address: _____

BALDWIN TOWNSHIP
30239 – 128th STREET
PO BOX 25
PRINCETON, MN 55371
TELEPHONE: (763) 389-8931
Fax: (763) 389-2751

For Office Use Only
Permit # _____
Sent to County _____
Initial Insp _____
Final Insp _____
Refund _____

**DEPARTMENT USE ONLY**
**INSPECTIONS BY APPOINTMENT ONLY - CONTACT TOWN HALL**
**INSPECTIONS ARE CONDUCTED ONLY ON FRIDAYS**

Date of Initial Inspection: _____

Right-of-Way width: Feet:_____ Total Width:_____ From Centerline:_____

Culvert/with aprons required: Yes_____ No_____ Size_____
(Culvert required at Township Engineer's discretion)

Drive access conforms to current engineering standards Yes_____ No_____

Initial Inspection Approved_____ Denied_____

Initial Inspection: Date:_____ Signature:_____

Initial Inspection Comments

---

Final Inspection: Date:_____ Signature:_____

Final Inspection Comments

FOR TOWNSHIP USE ONLY:
$50.00 Refundable Construction Deposit Paid to Applicant
Date _____
Check # _____
Amount $ _____

Revised 4/15/04
Revised 5/2/06
Revised 12/3/12
Revised 2/19/13
Revised 1/4/2016

**Bogart, Pederson**
**& Associates, Inc.**

LAND SURVEYING
CIVIL ENGINEERING
MAPPING

**Jon Bogart, PE**
Civil Engineer/Principal
13076 First Street
Becker, MN 55308-9322

Office: 763/262-8822
Cell: 763/286-9560
Fax: 763/262-8844
Toll free: 888/210-8301

E-mail: jbogart@bogart-pederson.com

## Section 200 Driveway Standards

200.01 Driveway permits are required.

## 210 Construction

210.01 Driveway culverts shall be a minimum of 15" in diameter and a minimum of 24 feet in length. Allowable materials are 16 gauge corrugated metal pipe. Aprons are required. Head walls constructed around the ends of culverts shall not be permitted. Driveway inslope in the ditch at the culvert shall be no greater then 4:1. Only one driveway will be allowed per residential lot per roadway except when authorized by the Town Board. Driveways must be spaced no closer than 150 feet to each other on a Township road designated as a collector roadway. Any variances from these requirements must be brought to the Town Board. Unapproved driveways will be required to be removed at the owners expense.

210.02 Safety aprons are required on all culverts located at the intersections of Township and collector roadways.

210.03 The maximum top width of a residential driveway within the public right-of-way shall be limited to 24 feet. A commercial driveway shall be limited to 30 feet in width.

210.04 The full width of the right of way shall be cleared and grubbed for the construction of the roadway section. All stumps, roots, logs, brush, etc . shall be removed from the upper 24 inches of roadbed embankment and oversized rock, broken concrete, metals, etc. shall be removed from the upper 12 inches of roadbed embankment.

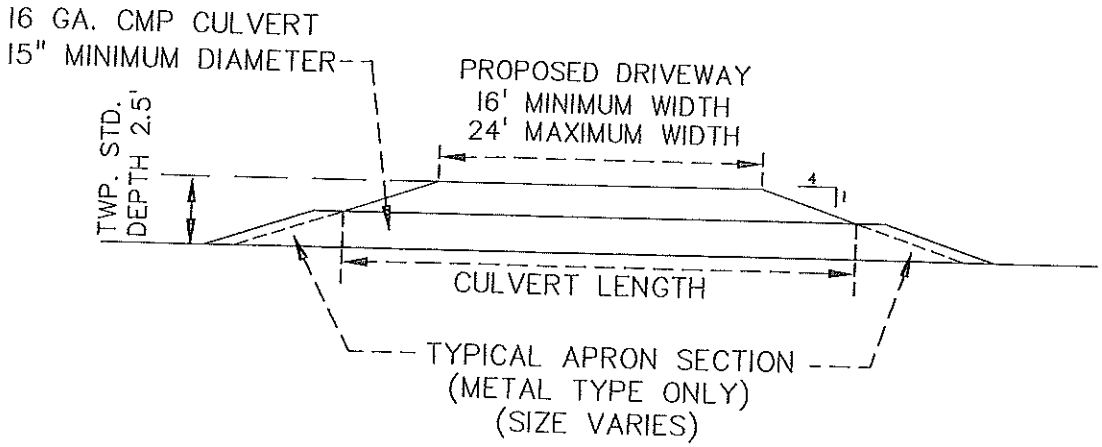


CULVERT LEN. (ft.) = DRIVEWAY WID. (ft.) + 2[((DITCH DEPTH−CULVERT DIA. in.)/12) * 4]
EXAMPLE: 16 ft DRIVEWAY WIDTH, 29" DITCH DEPTH, 15" CULVERT
CULVERT LEN. (ft.) = 16' + 2[((29"− 15")/12) * 4] = 25 ft.

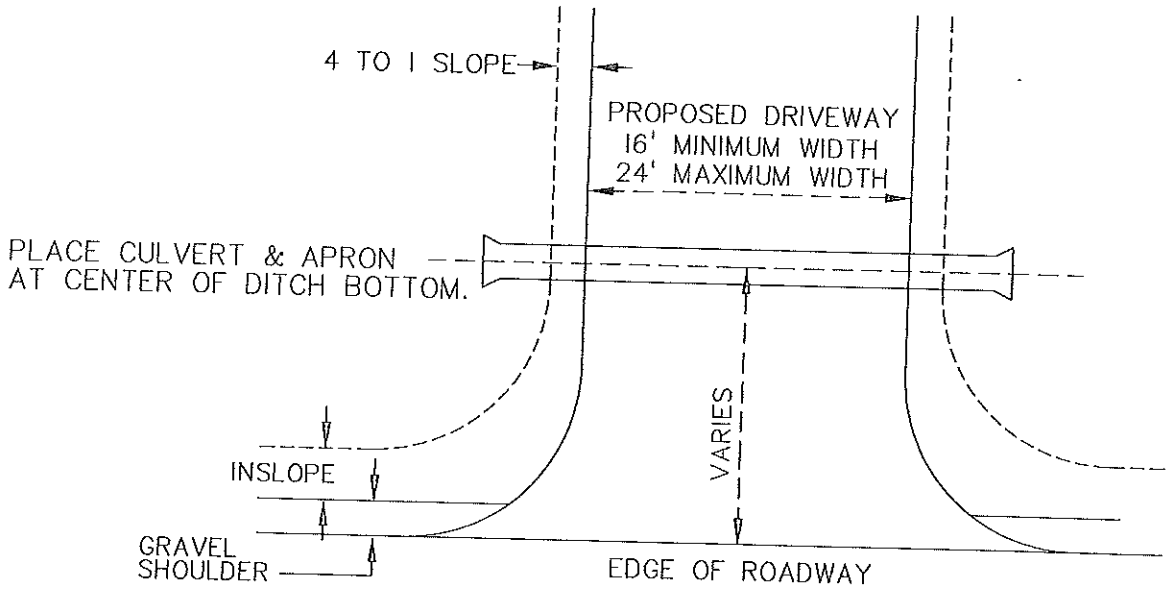


NOTES:
CULVERT APRON LIP IS TO BE PLACED AT DITCH BOTTOM.
IN THE OCCURRENCE THAT DITCH IS DEEPER THAN
THE MINIMUM, THE CULVERT LENGTH SHALL
BE EXTENDED TO MAINTAIN 4 TO 1 SLOPE.

| BALDWIN TOWNSHIP STANDARD DETAILS | DRIVEWAY CULVERT DETAIL (RESIDENTIAL) | |
|---|---|---|
| | Date: 4/7/03 | Plate No: BLD−202.0 |

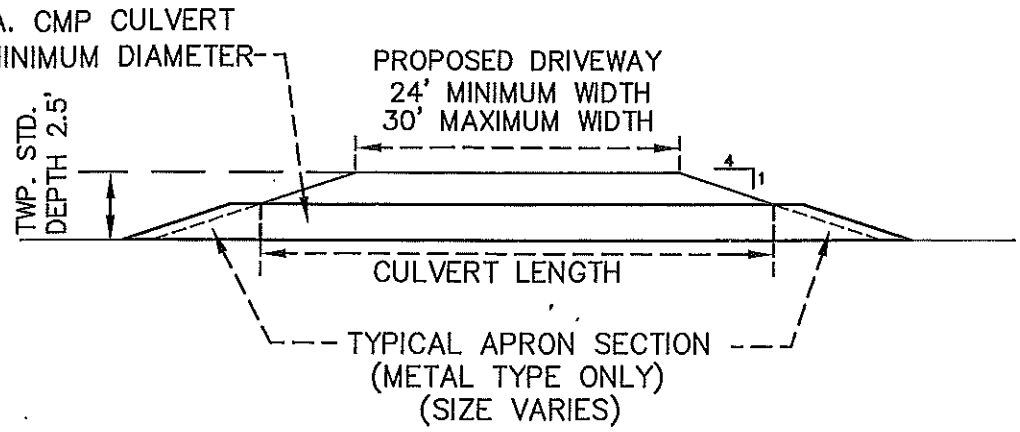


CULVERT LEN. (ft.) = DRIVEWAY WID. (ft.) + 2[((DITCH DEPTH–CULVERT DIA. in.)/12) * 4]
EXAMPLE: 16 ft DRIVEWAY WIDTH, 29" DITCH DEPTH, 15" CULVERT
CULVERT LEN. (ft.) = 24' + 2[((29"– 15")/12) * 4] = 33 ft.

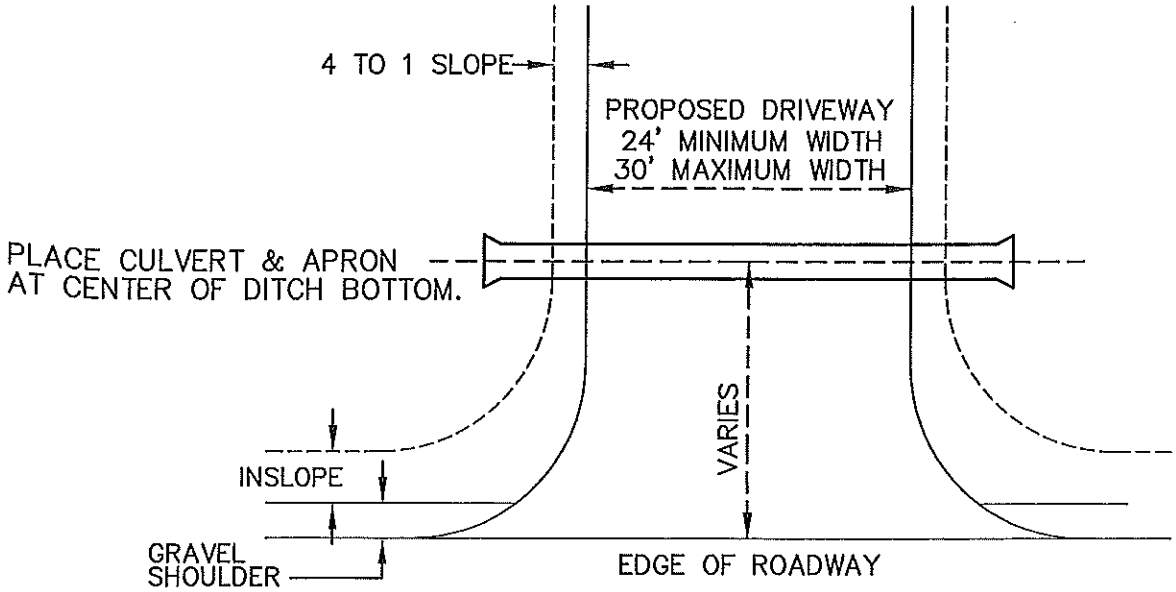


NOTES:
CULVERT APRON LIP IS TO BE PLACED AT DITCH BOTTOM.
IN THE OCCURRENCE THAT DITCH IS DEEPER THAN
THE MINIMUM, THE CULVERT LENGTH SHALL
BE EXTENDED TO MAINTAIN 4 TO 1 SLOPE.

| BALDWIN TOWNSHIP STANDARD DETAILS | DRIVEWAY CULVERT DETAIL (COMMERCIAL) | |
|---|---|---|
| | Date: 4/7/03 | Plate No: 203.0 |

# 2011 Minnesota Statutes

## 160.2715 RIGHT-OF-WAY USE; MISDEMEANORS.

(a) Except for the actions of the road authorities, their agents, employees, contractors, and utilities in carrying out their duties imposed by law or contract, and except as herein provided, it shall be unlawful to:

(1) obstruct any highway or deposit snow or ice thereon;

(2) plow or perform any other detrimental operation within the road right-of-way except in the preparation of the land for planting permanent vegetative cover or as authorized under section 160.232;

(3) erect a fence on the right-of-way of a trunk highway, county state-aid highway, county highway, or town road, except to erect a lane fence to the ends of a livestock pass;

(4) erect or reconstruct driveway headwalls in or on the right-of-way of a highway or road, except as may be allowed by permit from the road authority imposing reasonable regulations as are necessary to prevent interference with the construction, maintenance, and safe use of the highway or road and its appurtenances;

(5) dig any holes in any highway, except to locate markers placed to identify sectional corner positions and private boundary corners;

(6) remove any earth, gravel, or rock from any highway;

(7) obstruct any ditch draining any highway or drain any noisome materials into any ditch;

(8) place or maintain any building or structure within the limits of any highway;

(9) place or maintain any advertisement within the limits of any highway, except as provided in section 160.27, subdivision 7;

(10) paint, print, place, or affix any advertisement or any object within the limits of any highway, except as provided in section 160.27, subdivision 7;

(11) deface, mar, damage, or tamper with any structure, work, material, equipment, tools, signs, markers, signals, paving, guardrails, drains, or any other highway appurtenance on or along any highway;

(12) remove, injure, displace, or destroy right-of-way markers, or reference or witness monuments, or markers placed to preserve section or quarter-section corners;

(13) improperly place or fail to place warning signs and detour signs as provided by law;

(14) drive over, through, or around any barricade, fence, or obstruction erected for the purpose of preventing traffic from passing over a portion of a highway closed to public travel or to remove, deface, or damage any such barricade, fence, or obstruction.

(b) Any violation of this section is a misdemeanor.

**History:** 1959 c 500 art 1 s 27; 1973 c 123 art 5 s 7; 1977 c 334 s 1; 1979 c 275 s 1; 1980 c 435 s 1; 1980 c 533 s 2; 1986 c 387 s 1; 1986 c 398 art 27 s 2; 1986 c 435 s 1; 1989 c 179 s 2; 1995 c 23 s 1; 1998 c 283 s 1,2; 1998 c 403 s 5,6; 2004 c 295 art 2 s 15